GALVANIZED CHANNEL BELT CONVEYOR

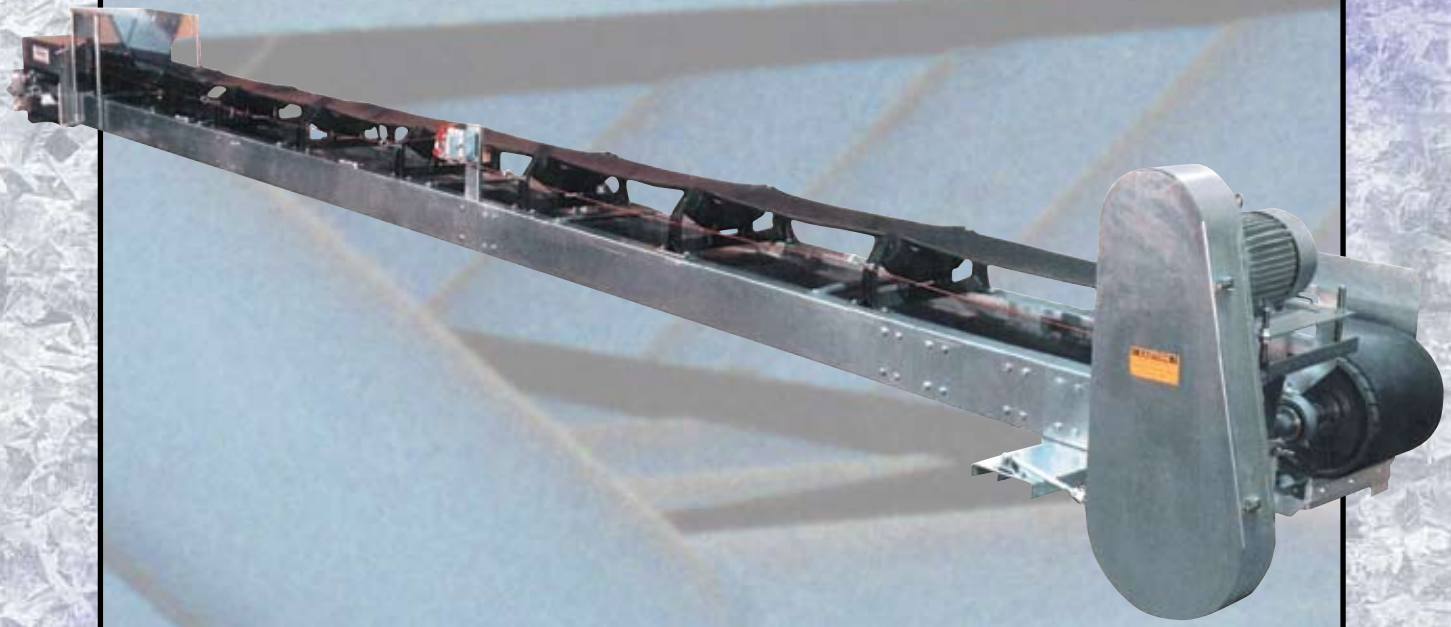

SWEET®

Galvanized Channel Belt Conveyor

STANDARD CONVEYOR DIMENSIONS

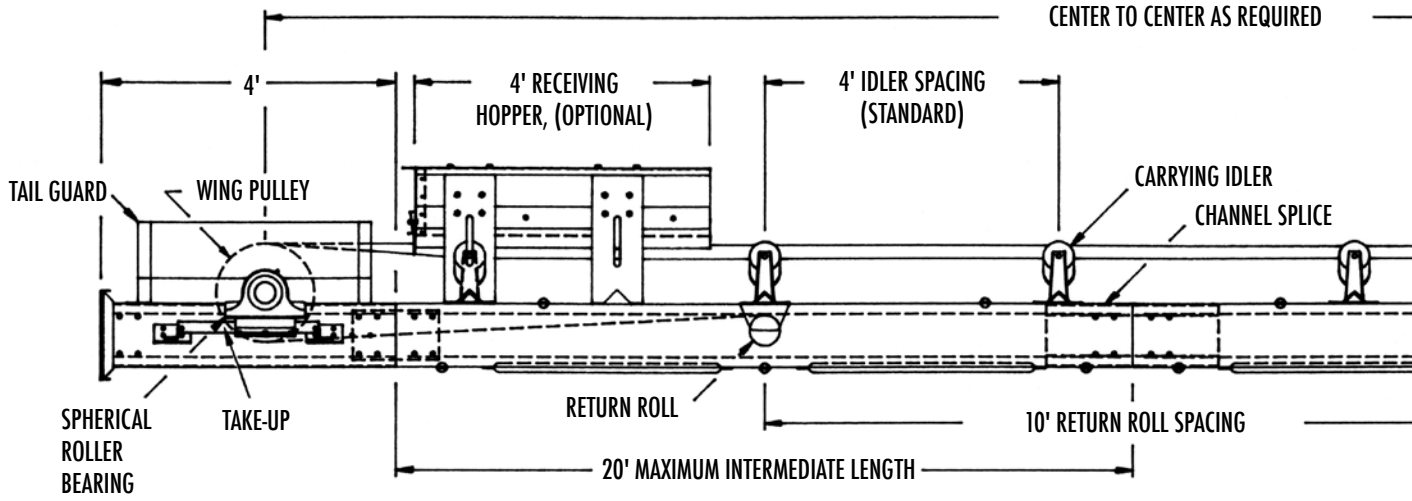

STANDARD CONVEYOR DIMENSIONS
NOT TO SCALE

FOR APPLICATIONS REQUIRING EXTRA HEAVY DUTY PERFORMANCE

Sweet's Heavy Duty formed channel galvanized steel frame features tubular cross braces and unique diaphragm squaring plate. It will support 565 pounds per linear foot when supports are spaced on 20 foot centers.

Sweet® Belt Conveyors are offered in belt widths from 14" thru 72". Standard head section includes pillow block spherical roller bearings; Turned, Ground, and Polished (TG&P) headshaft; and lagged pulley with bushed hubs. Standard tail section includes self cleaning wing style tail pulley; pillow block spherical roller bearings; and galvanized top mount protected screw take-up.

SPECIFICATIONS

Model Number	Belt Width	A	B	Typical C 20°	35°	45°	Idler CEMA Rating*
FCS1014	14"	28-1/2"	17"	9-5/8"	10-7/8"	N/A	B
FCS1018	18"	32-1/2"	21"	10-1/16"	11-11/16"	12-7/8"	B
FCS1024	24"	38-1/2"	27"	10-3/4"	12-7/8"	13-15/16"	B
FCS1030	30"	44-1/2"	33"	11-1/2"	14-1/16"	15-1/2"	B
FCS1036	36"	50-1/2"	39"	12-3/16"	15-3/16"	17"	B
FCS1042	42"	56-1/2"	45"	12-7/8"	16-3/8"	18-7/8"	B
FCS1048	48"	62-1/2"	51"	13-9/16"	17-1/2"	20-3/8"	B

* Other CEMA idlers available.
Note: All dimensions subject to change without notice.
Contact sales department for 54"-72" specifications.

COST SAVING FEATURES

- All bolted construction
- Corrosion resistant Galvanized finish
- Heavy duty formed steel channel frame and channel splice

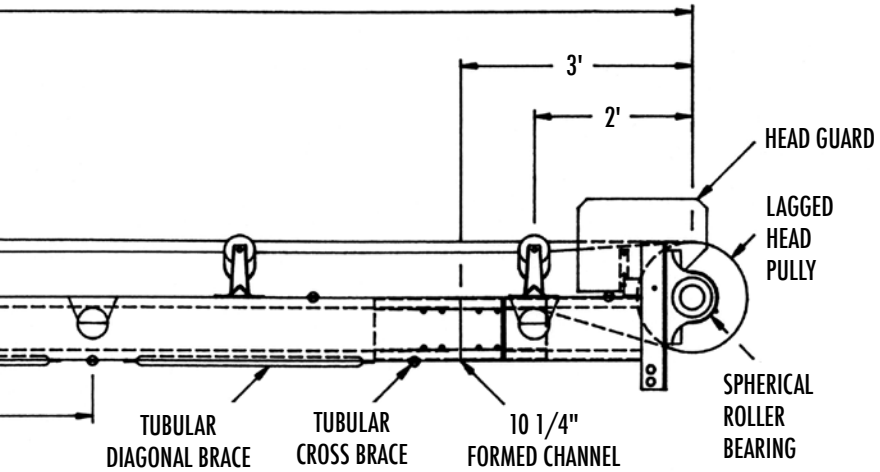

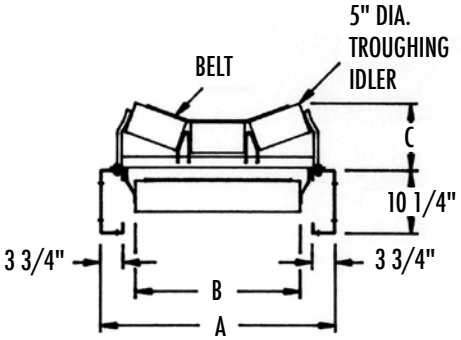

TYPICAL CONVEYOR CROSS SECTION

CAPACITIES: 20° Troughing Idlers

Belt Width	Lbs./Ft³	Capacity in Tons Per Hour — Belt Speed in Feet Per Minute 100	150	200	250	300	350	400
14"	**30**	9	14	19	24	28		
	50	16	24	32	40	47		
	75	24	35	47	60	71		
	100	32	47	63	79	95		
18"	**30**	13	19	26	32	39	45	
	50	26	39	52	65	78	91	
	75	38	57	76	95	114	133	
	100	52	78	104	130	156	182	
24"	**30**	28	42	56	70	84	98	112
	50	46	69	92	115	138	161	184
	75	69	103	138	172	207	242	276
	100	92	138	184	230	276	322	368
30"	**30**	43	64	86	108	129	150	172
	50	72	108	144	180	216	252	288
	75	108	162	216	260	324	378	432
	100	144	216	288	360	432	504	576
36"	**30**	65	97	130	162	195	228	260
	50	104	156	208	260	312	364	416
	75	155	233	310	388	465	543	620
	100	208	312	416	520	624	728	832
48"	**30**	113	169	226	282	339	396	452
	50	190	285	380	475	570	665	760
	75	280	420	560	700	840	980	1120
	100	378	565	756	945	1124	1320	1512

To figure capacities for 35° and 45° troughing idlers, multiply capacities of 20° idlers shown on left X 1.24 for 35° and 1.33 for 45°. For capacities of belt widths not listed, consult factory.

MOVING INTO THE NEXT GENERATION

Galvanized Channel Belt Conveyor

OPTIONS

- Intermediate screw take-ups
- Gravity take-ups
- Skirtboards
- Discharge head box
- Reversing conveyors
- Corrugated and smooth covers
- Weathertight covers
- Return belt covers
- Safety shutdown switches
- Man walkway
- Cleated belt
- 4" to 6" dia CEMA B,C,D, and E idlers
- Receiving hopper 12"H x 48"L
- Belt scrapers
- Complete drive packages are available from one HP to 250 HP for belt speeds from 100 to 800 FPM, within CEMA standards.

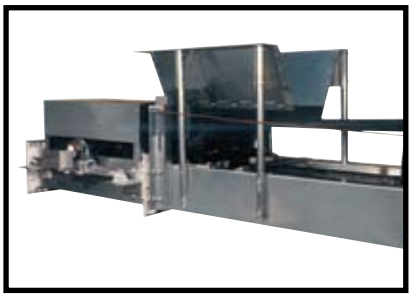

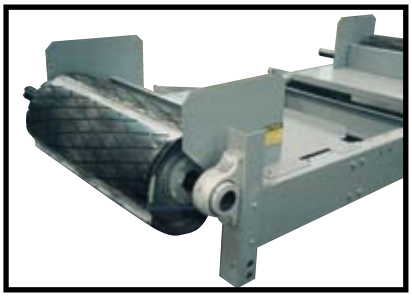

INSTALLATIONS

SWEET®
MANUFACTURING COMPANY
Springfield, OH 45501

Telephone 937-325-1511
Fax 937-322-1963
Toll Free 1-800-334-7254

The Governor's Excellence in Exporting Award

MEMBER OF AFIA

Website: www.sweetmfg.com
E-mail: sales@sweetmfg.com

The Quality Line Since 1955

5M-MP-6/06