SILVER STAIRS™

SAFE — CONVENIENT — VERSATILE

- 24” Wide
- All Galvanized
- Variable Pitch Adjustment
- Channel Formed for Rigidity
- Factory Assembled Modules
- Sturdy 1½” dia. Tubular Handrails
- Overlapping 12 Gauge Side Panels
- Unique Self-Draining, Slip-Resistant Stair Tread

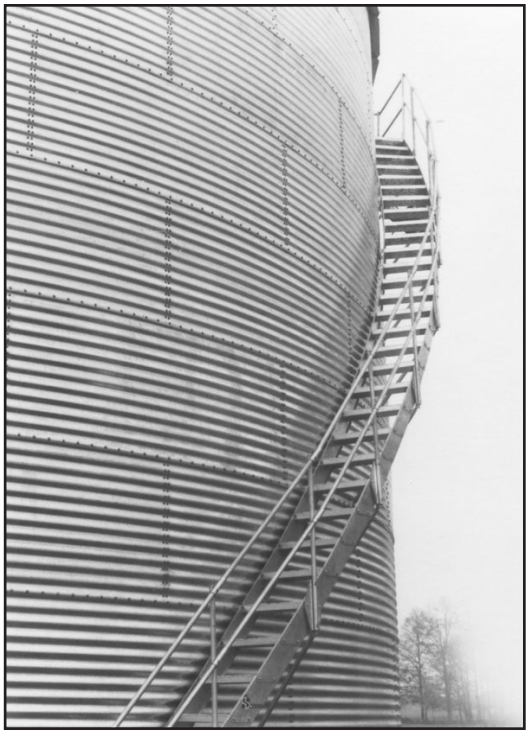

SILVER STAIRS™

Designed with variable pitch or incline, from 30 to 60 degrees, for safe and easy access to platforms, work areas, elevation changes and inclined surfaces. Countless applications are possible by combining component parts.

SILVER SPIRAL STAIRS™

Developed for safe and convenient access on bins and tanks with varying diameters, from 18 to 90 feet. The Spiral Silver Stairs may be installed at time of erection or added to existing storage units.

SWEET®
MANUFACTURING COMPANY

P.O. Box 1086 • Springfield, OH 45501
Telephone: (937) 325-1511 • Fax: (937) 322-1963

Website: www.sweetmfg.com • Email: sales@sweetmfg.com

SILVER STAIR STEPS

STRONG — SAFE — CONVENIENT

- Unique slip-resistant safety surface and self-draining design provide sure footing in all weather.
- 14 gauge, one-piece galvanized construction with prepunched side holes for easy bolt attachment.
- Available as individual stair treads or pre-assembled, adjustable pitch riser sections.

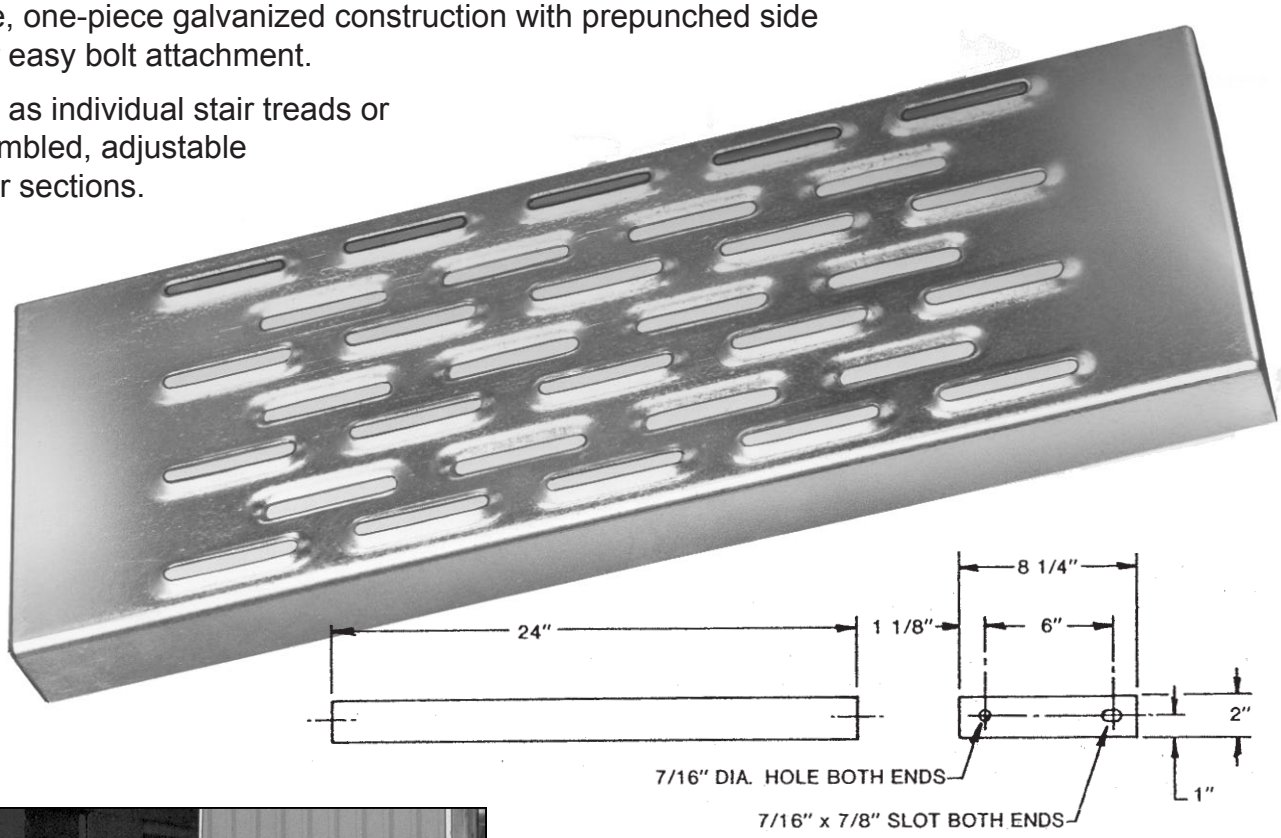

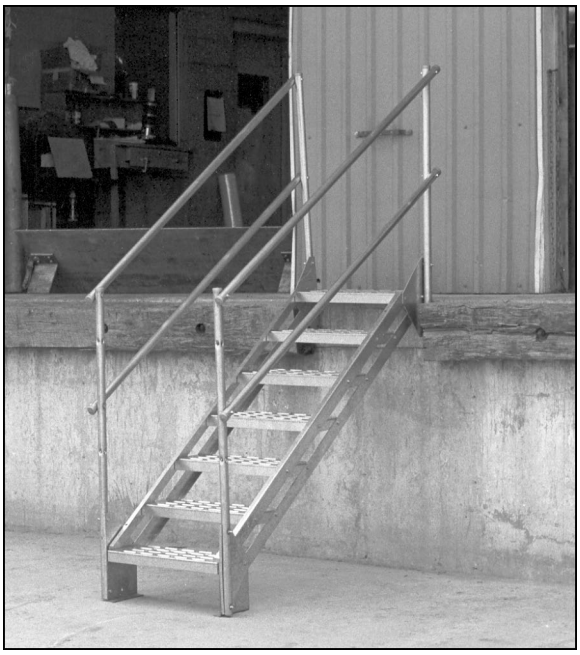

Typical application of stairs, complete with hand rails.

Adaptable for a Variety of Applications Requiring Strong, Safe & Convenient Footing

SWEET®
MANUFACTURING COMPANY

P.O. Box 1086 • Springfield, OH 45501
Telephone: (937) 325-1511 • Fax: (937) 322-1963

Website: www.sweetmfg.com • Email: sales@sweetmfg.com