QUICK-KEY® SPOOL CONVEYOR

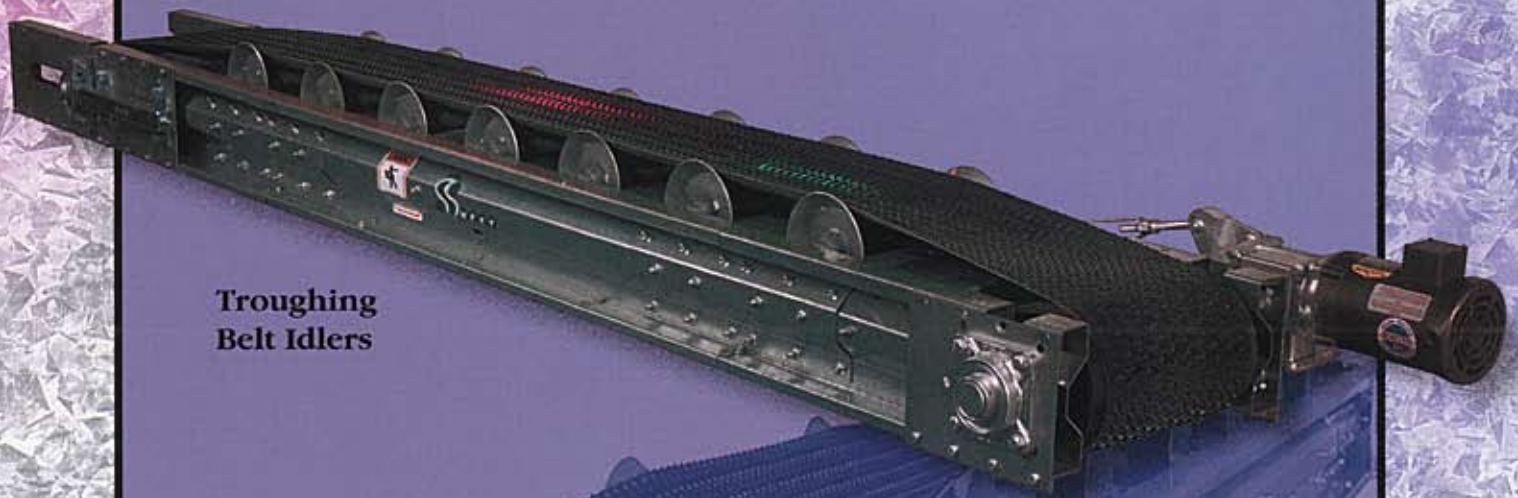

Troughing
Belt Idlers

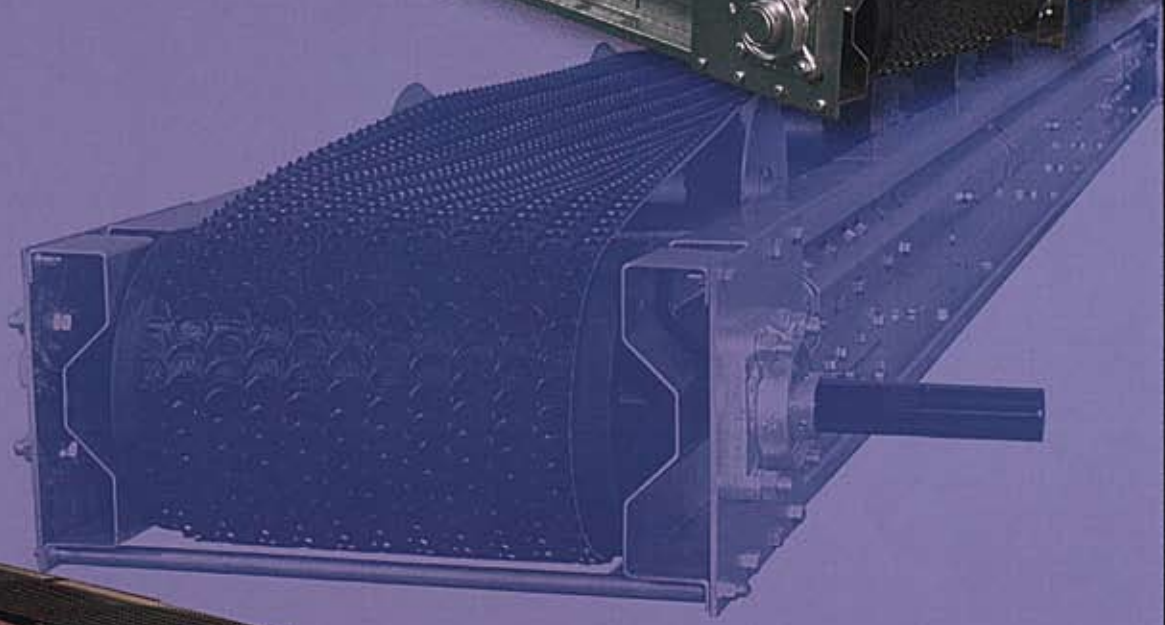

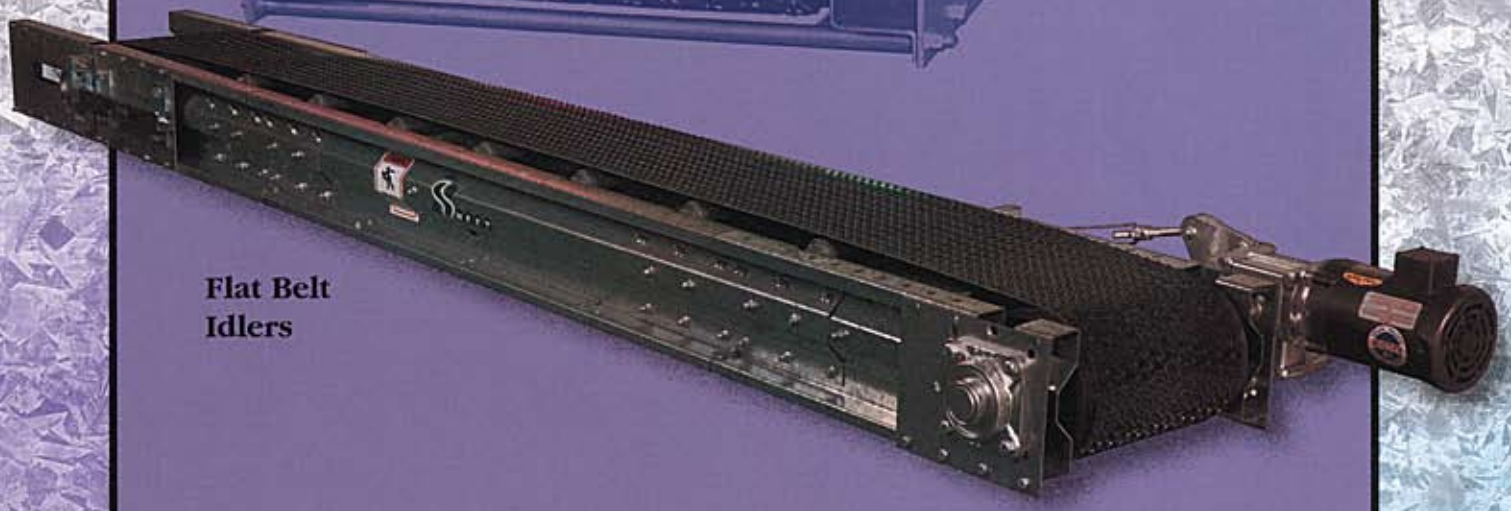

Flat Belt
Idlers

SWEET®

MOVING INTO THE NEXT GENERATION

QUICK-KEY® SPOOL CONVEYOR

For applications where space is limited: Low profile, 20 feet clear span, Galvanized construction, Modular bolted assembly

The unique formed rigid design of an all galvanized belt conveyor by SWEET® is finding noteworthy user appeal in numerous applications throughout many industries. This model offers the advantages of a greater span potential combined with a low profile height of 12 inches where space is limited.

Featuring flexibility by design, conveyors are available with various belt widths and include spool idlers with sealed motor grade ball bearings. Quick change key slots, spaced on one foot increments, allow for any combination of idler spacing.

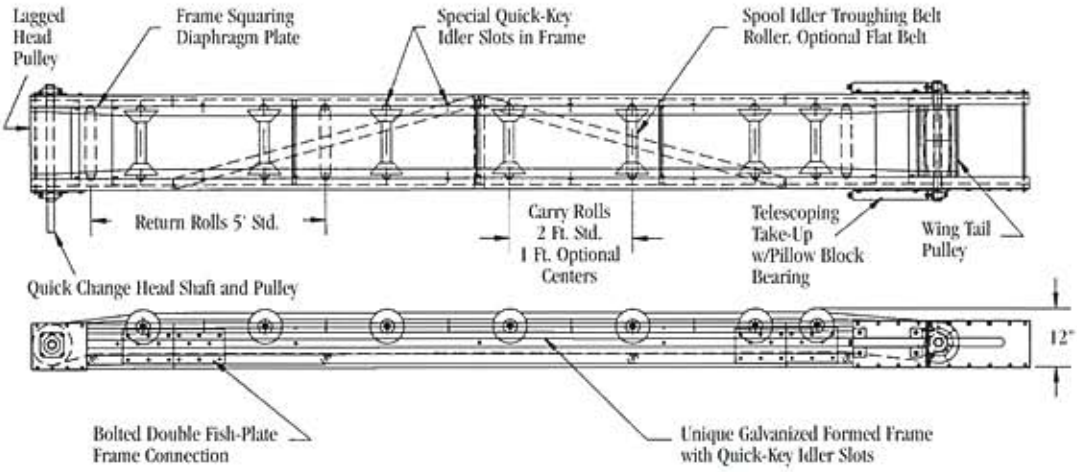

Other significant features include: lagged drive pulley, wing tail pulley with screw take-ups, minimum maintenance self-cleaning frame, low horsepower requirements, easy assembly and installation. There are several belt type options and covers can be provided for enclosure against the elements. Options include load skirts, scraper/brush for belt, 18" deep truss frame to increase free span.

Quick change key slots spaced on one foot increments.

Typical Conveyor Cross Section

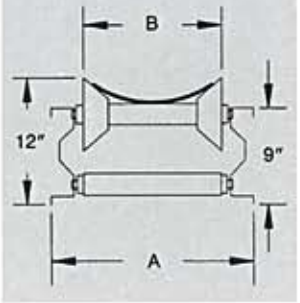

Conveyor Capacities - Spool Idlers

Belt Width	Dim. A	Dim. B	Lbs./Ft.³	*Capacities in tons per hour — Belt speed in feet per minute: 100	150	200	250	300	350	400
12"	19	12.5	15	3	4	5	6	8	9	10
			30	5	8	10	13	15	18	20
			50	9	13	17	21	25	29	33
18"	25	18.5	15	6	9	12	15	17	20	23
			30	12	18	23	29	35	41	46
			50	20	29	39	49	58	68	77
24"	31	24.5	15	10	16	21	26	31	36	41
			30	21	31	41	52	62	72	82
			50	35	52	69	86	103	120	137

* Capacities and performance are based on ideal conditions and are approximate. Specifications and performance data are subject to change without notice and without responsibility of the manufacturer to incorporate changes in items previously manufactured.

SWEET® MANUFACTURING COMPANY
Springfield, OH 45501

Telephone 937-325-1511
Fax 937-322-1963
Toll Free 1-800-334-7254

The Governor's Excellence in Exporting Award

MEMBER OF AFIA

Website: www.sweetmfg.com
E-mail: sales@sweetmfg.com

5M-MP-6/06