BIN GATES

Duplex

Ceiling Mounted

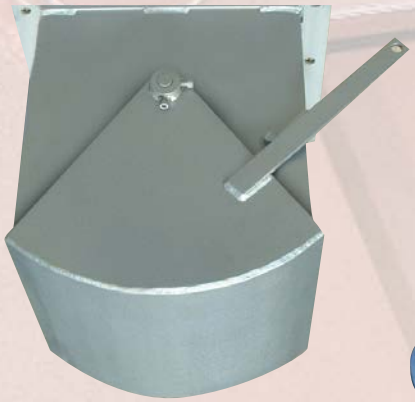

Simplex

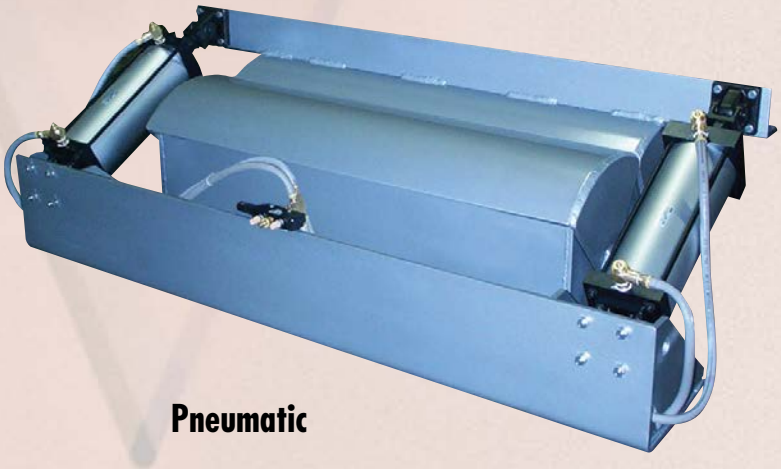

Pneumatic

Made in the USA

SWEET®

DUPLEX MODELS

Sweet® clam shell bin gates are all welded heavy gauge plate steel with angle reinforcements. Gate doors are balanced for easy opening and closing, and are replaceable. Each bin gate receives two coats of hammertone industrial enamel paint. All models can be readily adapted to power operation. Pneumatic or hydraulic cylinders provide simple operation and remote control for out of the way locations. Stainless steel and abrasion resistant steel construction are offered as an option. Call for details.

Both gates open and close together at the center with a single movement of the control handle.

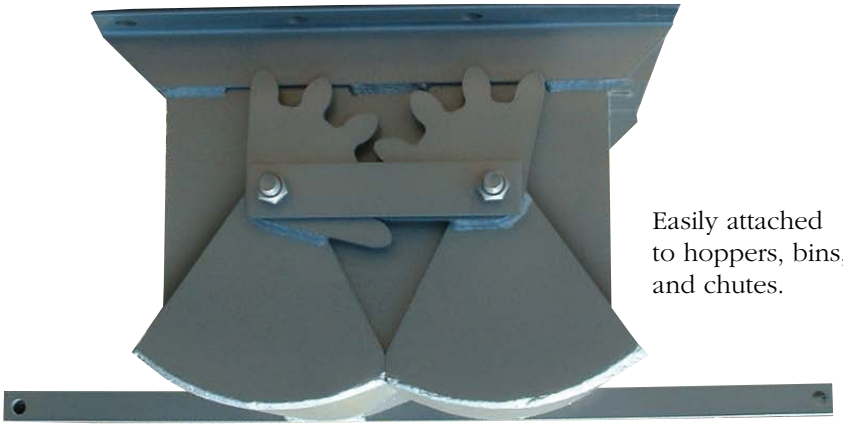

Easily attached to hoppers, bins, and chutes.

INSTALLATIONS

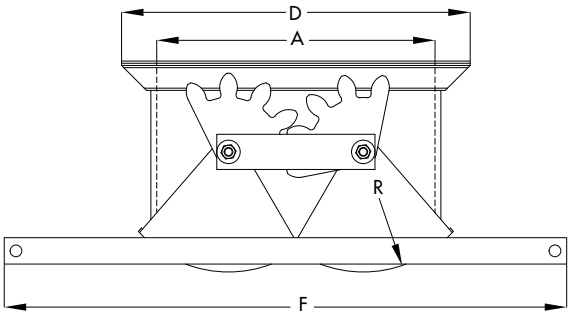

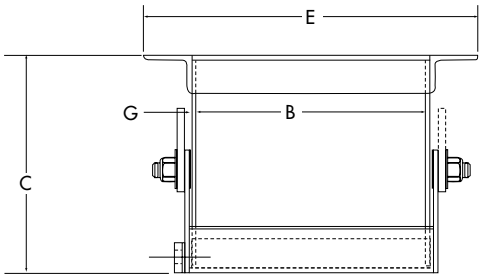

DUPLEX BIN GATES

Valve Size — **Dimensions in Inches**

A	B	C	D	E	F	G	H	J	Bolt Pattern Type	R	K	L
12	12	11 1/2	17 1/2	17 1/2	36	1/4			1	5 1/2		
12	16	11 1/2	17 1/2	21 1/2	36	1/4	7 5/8	11/16	2	5 1/2	6 1/2	6 1/4
12	18	11 1/2	17 1/2	23 1/2	36	1/4	7 5/8	11/16	2	5 1/2	7 1/8	7
14	14	13 1/4	19 3/4	19 3/4	38	3/8	6	5 1/2	3	6 1/2	6	5 1/2
14	18	13 1/4	19 3/4	23 3/4	38	3/8	7 1/4	7	3	6 1/2	6	5 1/2
15	15	14 1/4	20 3/4	20 3/4	39	3/8	6	6 1/2	3	6 1/2	6	6 1/2
15	20	14 1/4	20 3/4	25 3/4	39	3/8	8	7 1/2	3	6 1/2	6	6 1/2
15	24	14 1/4	20 3/4	29 3/4	39	3/8	6	6 1/2	4	6 1/2		
16	16	14 3/4	21 3/4	21 3/4	40	3/8	6 1/2	6 1/2	3	7 3/4	6 1/2	6 1/2
16	20	14 3/4	21 3/4	25 3/4	40	3/8	8	7 1/2	3	7 3/4	6 1/2	6 1/2
18	12	15 1/4	23 3/4	17 3/4	42	3/8	7 3/4	13/16	2	8 1/2	7 1/4	7
18	18	15 1/4	23 3/4	23 3/4	42	3/8	7 1/4	7	3	8 1/2	7 1/4	7
18	24	15 1/4	23 3/4	29 3/4	42	3/8	7 1/4	7	4	8 1/2		
20	20	17	25 3/4	25 3/4	44	3/8	8	7 1/2	3	9	8	7 1/2
24	24	18 1/2	29 3/4	29 3/4	48	3/8			5	10 1/4		
24	48	18 1/2	29 3/4	53 3/4	48	1/2			6	10 1/4		

"B" length can be changed upon request. Contact sales for price and availability.

Note: Dimensions (in inches) are for reference only and are subject to change.

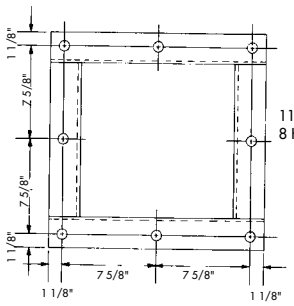

TYPE 1

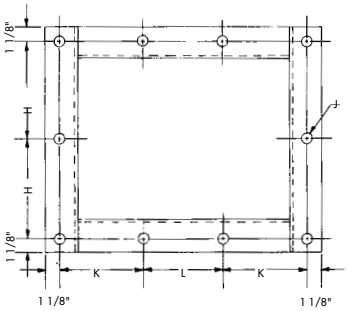

TYPE 2

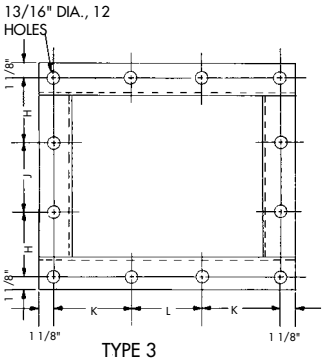

TYPE 3

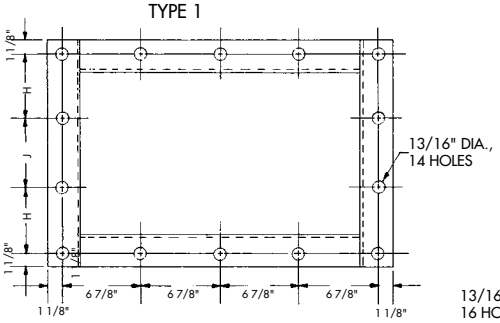

TYPE 4

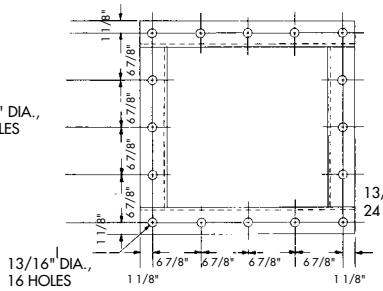

TYPE 5

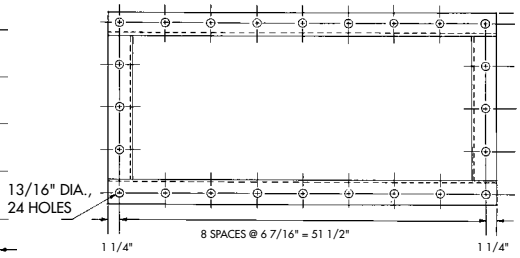

TYPE 6

BIN GATES

SIMPLEX MODELS

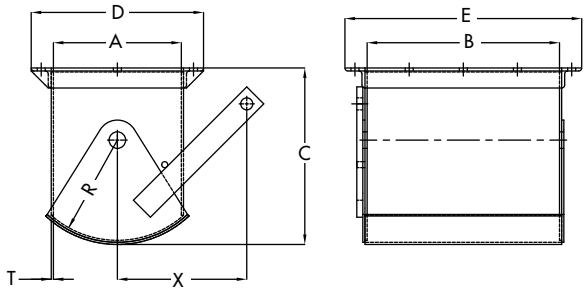

Simplex Bin Gates

Valve Size							Dimensions in Inches
A	B	C	D	E	R	T	X
6	6	8 1/2	8 3/4	8 3/4	5 1/4	10 GA.	6 5/8
7	7	9	9 3/4	9 3/4	5 1/2	10 GA.	6 3/4
8	8	11	10 3/4	10 3/4	6 1/2	10 GA.	8
12	12	16	17 3/8	17 3/8	10 5/16	3/16	13 1/4
12	16	16	17 3/8	21 3/8	10 5/16	3/16	13 1/4
12	20	16	17 3/8	25 3/8	10 5/16	3/16	13 1/4
14	14	18 1/2	19 1/2	19 1/2	12	1/4	13 1/4
16	16	21	21 1/2	21 1/2	15	1/4	13 1/4
18	18	24 1/4	23 1/2	23 1/2	14 3/4	1/4	13 1/4
18	24	24 1/4	23 1/2	29 1/2	14 3/4	1/4	13 1/4
20	20	26 1/8	25 3/4	25 3/4	17 7/8	3/8	13 1/4

Note: Dimensions (in inches) are for reference only and are subject to change.

UNDERCUT WALL & CEILING MOUNTED

Sweet® wall and ceiling undercut bin gates are designed to mount on vertical sides or bottom of bins, chutes, and hoppers. Undercut gates are similar in design to Sweet® simplex gates except discharge material is directed diagonally away or off to one side. Flange connections are pre-drilled for easy field installation.

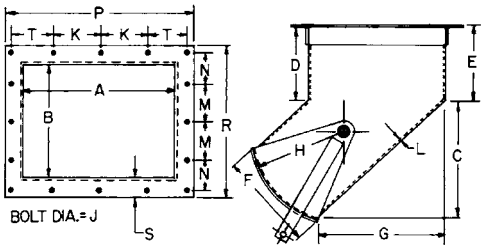

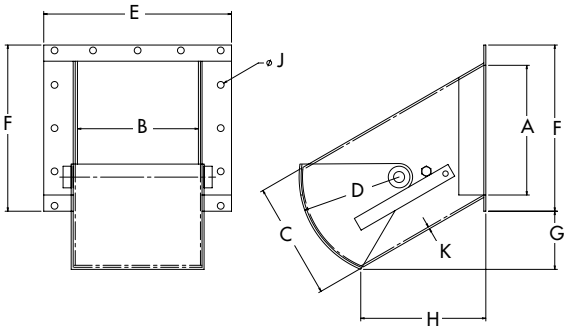

CEILING MOUNTED UNDERCUT BIN GATES

Valve Size																Dimensions in Inches
A	B	C	D	E	F	G	H	J	K	L	M	N	P	R	S	T
12	12	12 1/4	4 3/4	9 7/8	13	12 1/4	10 1/8	5/8	4	3/16	4	3 7/16	17 3/8	17 3/8	2 11/16	3 7/16
14	10	14 1/4	5	10 7/8	15 1/4	14 1/2	12	5/8	3 1/2	1/4	5	3 1/2	19 1/2	15 1/2	2 3/4	3
16	14	17	6	12 7/8	17 1/4	17	12	5/8	5 1/2	1/4	3 1/2	3	21 1/2	19 1/2	2 3/4	4
18	18	21	8 9/16	16 1/4	19 1/2	21	15	3/4	6	1/4	6	4 1/2	23 1/2	23 1/2	2 3/4	4 1/2
24	20	25	10	20	25 1/4	25	18	3/4	8	3/8	6 1/2	5	29 1/2	25 1/2	2 3/4	4 1/2
24	24	25	10	20	25 1/4	25	18	3/4	8	3/8	8	4 1/2	29 1/2	29 1/2	2 3/4	4 1/2

Note: Dimensions (in inches) are for reference only and are subject to change.

WALL MOUNTED UNDERCUT BIN GATES

Valve Size									Dimensions in Inches
A	B	C	D	E	F	G	H	J	K
12	12	10 3/8	9 1/4	17 3/8	15 3/8	6 7/8	11 1/4	5/8	3/16
18	18	15 5/8	14 5/8	23 1/2	22 1/2	11 3/16	19	3/4	1/4
18	24	15 7/16	13	29 1/2	21 1/2	11	19	3/4	1/4
24	24	20 3/4	16	29 1/2	27 1/2	12 1/2	22	3/4	3/8
24	30	20 3/4	16	35 1/2	27 1/2	12 1/16	22	3/4	3/8

Note: Dimensions (in inches) are for reference only and are subject to change.

OTHER INDUSTRIAL PRODUCTS AVAILABLE FROM SWEET:

Industrial Bucket Elevators, Formed Channel Belt Conveyors, Quick-Key® Spool Belt Conveyors, Elevator Support Towers and Conveyor Support Systems.

SWEET® MANUFACTURING COMPANY SINCE 1955

Telephone: 937-325-1511
Fax: 937-322-1963
Toll Free: 1-800-334-7254
Website: www.sweetmfg.com
E-mail: sales@sweetmfg.com