INDUSTRIAL BUCKET ELEVATORS

SWEET®

Industrial Bucket Elevators

CENTRIFUGAL DISCHARGE

Belt

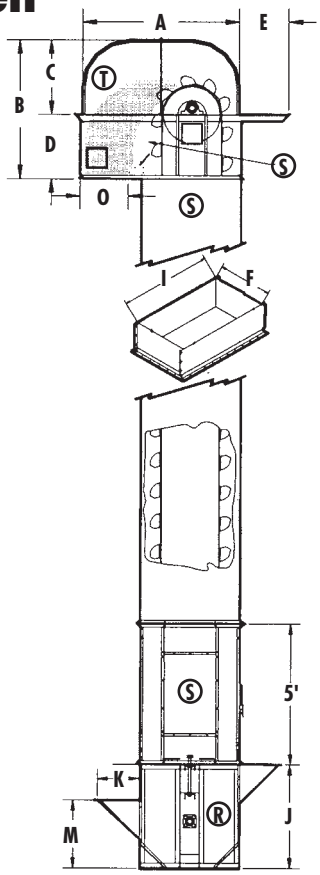

Chain

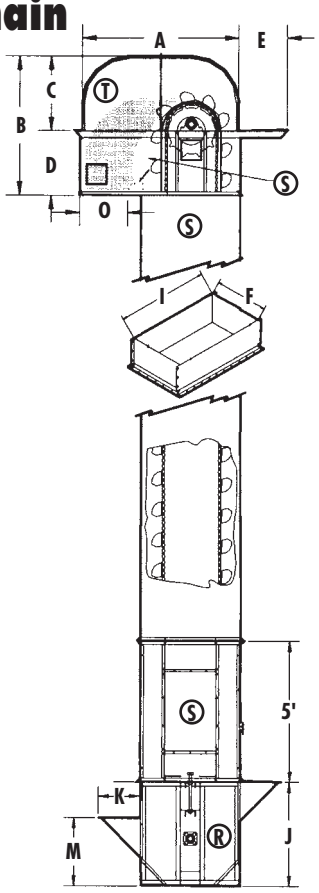

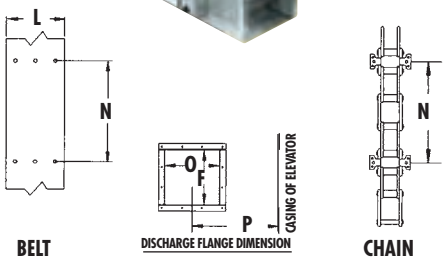

STANDARD SPECIFICATIONS

Belt																			Chain	
High Capacity Model	Standard Model	Dimensions (inches)														Gauge			Standard Model	High Capacity Model
		A	B	C	D	E	F	I	J	K	L	M	N	O	P	R	S	T	Liner		
HB64A11	B64A11	46	42	23	19	22	12	26	32	14	7	20	13	12	14	10	12	14	10	C64A11	HC64A11
HB85A11	B85A11	46	42	23	19	22	12	26	32	14	9	20	13	12	14	10	12	14	10	C85A11	HC85A11
HB64A18	B64A18	55	47	28	19	24	12	34	39	15	7	24	13	12	15	10	12	14	10	C64A18	HC64A18
HB85A18	B85A18	55	47	28	19	24	12	34	39	15	9	24	13	12	15	10	12	14	10	C85A18	HC85A18
HB85A24	B85A24	66	59	32	27	24	14	42	44	16	9	28	13	14	17	10	12	14	10	C85A24	HC85A24
HB106A24	B106A24	75	69	37	32	32	14	48	48	18	11	30	15	14	20	10	12	14	10	C106A24	HC106A24
HB127A24	B127A24	75	69	37	32	32	17	48	48	18	13	30	15	17	20	10	12	14	10	C127A24	HC127A24
HB147A24	B147A24	75	69	37	32	32	20	48	48	18	15	30	18	17	20	10	12	14	10	C147A24	HC147A24
HB127A30	B127A30	87	99	52	47	32	17	56	56	20	13	36	15	17	22	3/16	10	14	10	C127A30	HC127A30
HB147A30	B147A30	87	99	52	47	32	20	56	56	20	15	36	18	17	22	3/16	10	14	10	C147A30	HC147A30
HB168A30	B168A30	87	99	52	47	32	20	56	56	20	17	36	18	17	22	3/16	10	14	10	C168A30	HC168A30
HB188A30	B188A30	87	99	52	47	32	24	56	56	20	19	36	18	17	22	3/16	10	14	10	C188A30	HC188A30

Dimensions are approximate to the nearest whole inch and are subject to change without notice.

CONTINUOUS DISCHARGE

Belt

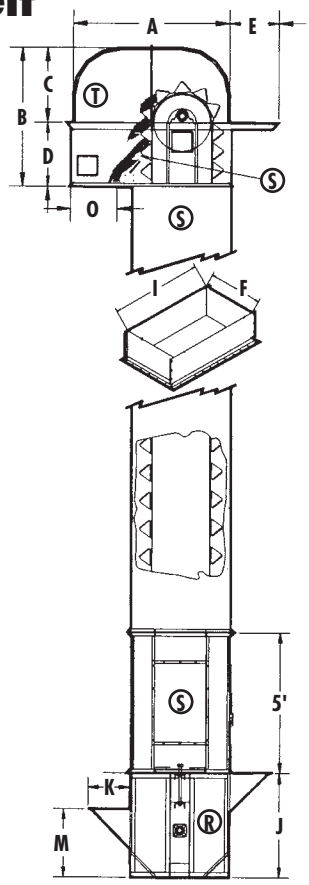

Chain

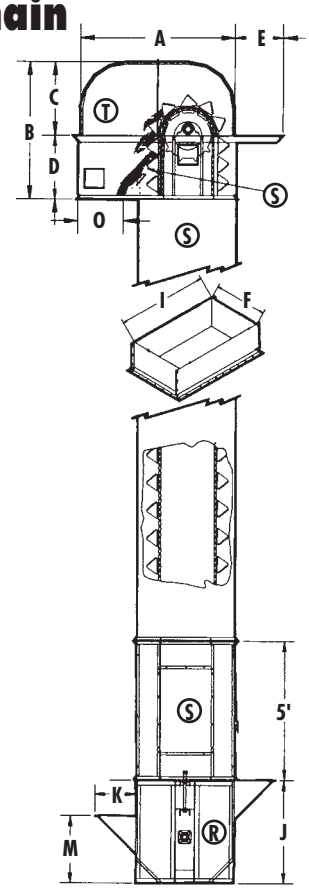

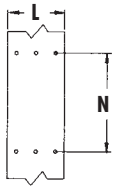

BELT

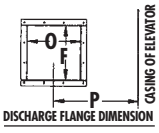

DISCHARGE FLANGE DIMENSION

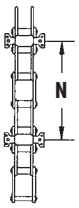

CHAIN

STANDARD SPECIFICATIONS

Belt Model	Dimensions (inches) A	B	C	D	E	F	I	J	K	L	M	N	O	P	Gauge R	S	T	Liner	Chain Model
B85E18	55	47	28	19	24	12	34	39	15	9	24	8	12	15	10	12	14	10	C85E18
B85E24	66	59	32	27	24	14	42	44	16	9	28	8	14	17	10	12	14	10	C85E24
B105E24	66	59	32	27	24	14	42	44	16	11	28	8	14	17	10	12	14	10	C105E24
B107E24	75	69	37	32	32	14	48	48	18	11	30	12	14	20	10	12	14	10	C107E24
B127E24	75	69	37	32	32	17	48	48	18	13	30	12	17	20	10	12	14	10	C127E24
B147E24	75	69	37	32	32	20	48	48	18	15	30	12	17	20	10	12	14	10	C147E24
B148E24	75	69	37	32	32	20	48	48	18	15	30	12	17	20	10	12	14	10	C148E24
B168E24	75	69	37	32	32	20	48	48	18	17	30	12	17	20	10	12	14	10	C168E24
B188E24	75	69	37	32	32	24	48	48	18	19	30	12	17	20	3/16	10	14	10	C188E24

Dimensions are approximate to the nearest whole inch and are subject to change without notice.

Capacities at a glance

Belt

Centrifugal Discharge

Capacity* Tons Per Hour Material Density 35#	50#	75#	100#	ft.³/hr.	Model	Bucket** Size	Spacing	Belt Speed FPM	Head Pully RPM	Diameter
03.9	05.6	08.4	11.2	223	B64A11	6x4	13"	180	62	11"
09.1	13.1	19.6	26.1	522	B85A11	8x5	13"	180	62	11"
05.0	07.2	10.7	14.3	286	B64A18	6x4	13"	230	48	18"
11.7	16.7	25.0	33.4	667	B85A18	8x5	13"	230	48	18"
13.2	18.8	28.2	37.7	753	B85A24	8x5	13"	260	41	24"
19.7	28.1	42.1	56.2	1123	B106A24	10x6	15"	260	41	24"
31.1	44.5	66.7	88.9	1778	B127A24	12x7	15"	260	41	24"
31.6	45.1	67.6	90.2	1803	B147A24	14x7	18"	260	41	24"
35.9	51.3	77.0	102.6	2052	B127A30	12x7	15"	300	38	30"
36.4	52.0	78.0	104.0	2080	B147A30	14x7	18"	300	38	30"
53.8	76.9	115.3	153.8	3075	B168A30	16x8	18"	300	38	30"
61.7	88.2	132.3	176.4	3528	B188A30	18x8	18"	300	38	30"

High Capacity Centrifugal Discharge

Capacity* Tons Per Hour Material Density 35#	50#	75#	100#	ft.³/hr.	Model	Bucket** Size	Spacing	Belt Speed FPM	Head Pully RPM	Diameter
06.4	09.1	13.7	18.3	365	HB64A11	6x4	8"	180	62	11"
14.9	21.3	31.9	42.6	851	HB85A11	8x5	8"	180	62	11"
08.2	11.7	17.5	23.3	466	HB64A18	6x4	8"	230	48	18"
16.9	24.1	36.2	48.2	964	HB85A18	8x5	9"	230	48	18"
19.1	27.2	40.8	54.5	1089	HB85A24	8x5	9"	260	41	24"
29.5	42.1	63.2	84.3	1685	HB106A24	10x6	10"	260	41	24"
38.9	55.6	83.4	111.2	2223	HB127A24	12x7	12"	260	41	24"
47.1	67.3	100.9	134.6	2691	HB147A24	14x7	12"	260	41	24"
44.9	64.1	96.2	128.3	2565	HB127A30	12x7	12"	300	38	30"
54.3	77.6	116.4	155.3	3105	HB147A30	14x7	12"	300	38	30"
80.3	114.8	172.1	229.5	4590	HB168A30	16x8	12"	300	38	30"
92.1	131.6	197.4	263.3	5265	HB188A30	18x8	12"	300	38	30"

Continuous Discharge

Capacity* Tons Per Hour Material Density 35#	50#	75#	100#	ft.³/hr.	Model	Bucket*** Size	Spacing	Belt Speed FPM	Head Pully RPM	Diameter
16.0	22.9	34.3	45.7	914	B85E18	8x5	8"	180	38	18"
17.8	25.4	38.1	50.8	1016	B85E24	8x5	8"	200	32	24"
22.4	32.0	48.0	64.0	1280	B105E24	10x5	8"	200	32	24"
29.1	41.6	62.4	83.3	1665	B107E24	10x7	12"	200	32	24"
35.7	51.1	76.6	102.1	2042	B127E24	12x7	12"	200	32	24"
41.9	59.9	89.8	119.7	2394	B147E24	14x7	12"	200	32	24"
54.5	77.8	116.7	155.6	3112	B148E24	14x8	12"	200	32	24"
62.2	88.9	133.4	177.9	3557	B168E24	16x8	12"	200	32	24"
71.1	101.5	152.3	203.1	4061	B188E24	18x8	12"	200	32	24"

* Approximate capacity with buckets 75% fill.
** Industrial duty style AA malleable iron buckets, other buckets optional.
*** 10GA. Steel buckets, other buckets optional.

Chain

Centrifugal Discharge

Capacity* Tons Per Hour Material Density 35#	50#	75#	100#	ft.³/hr.	Model	Bucket** Size	Spacing	Chain Speed FPM	Head Sprocket RPM	Pitch Dia.
03.9	05.6	08.4	11.2	223	C64A11	6x4	13"	180	62	11"
09.1	13.1	19.6	26.1	522	C85A11	8x5	13"	180	62	11"
05.0	07.2	10.7	14.3	286	C64A18	6x4	13"	230	48	18"
11.7	16.7	25.0	33.4	667	C85A18	8x5	13"	230	48	18"
10.7	15.4	23.0	30.7	614	C85A24	8x5	16"	260	41	24.25"
18.4	26.3	39.5	52.7	1053	C106A24	10x6	16"	260	41	24.25"
29.2	41.7	62.5	83.4	1667	C127A24	12x7	16"	260	41	24.25"
35.3	52.0	75.7	100.9	2018	C147A24	14x7	16"	260	41	24.25"
28.3	40.4	60.6	80.8	1616	C127A30	12x7	19"	300	38	30.50"
34.2	48.9	73.4	97.8	1956	C147A30	14x7	19"	300	38	30.50"
50.6	72.3	108.5	144.6	2892	C168A30	16x8	19"	300	38	30.50"
58.0	82.9	124.4	165.9	3317	C188A30	18x8	19"	300	38	30.50"

High Capacity Centrifugal Discharge

Capacity* Tons Per Hour Material Density 35#	50#	75#	100#	ft.³/hr.	Model	Bucket** Size	Spacing	Chain Speed FPM	Head Sprocket RPM	Pitch Dia.
6.4	09.1	13.7	18.3	365	HC64A11	6x4	8"	180	62	11"
14.9	21.3	31.9	42.6	851	HC85A11	8x5	8"	180	62	11"
08.2	11.7	17.5	23.3	466	HC64A18	6x4	8"	230	48	18"
12.7	18.1	27.2	36.3	725	HC85A18	8x5	12"	230	48	18"
14.3	20.5	30.7	41.0	819	HC85A24	8x5	12"	260	41	24"
24.6	35.1	52.7	70.2	1404	HC106A24	10x6	12"	260	41	24"
38.9	55.6	83.4	111.2	2223	HC127A24	12x7	12"	260	41	24"
47.1	67.3	100.9	134.6	2691	HC147A24	14x7	12"	260	41	24"
37.7	53.9	80.8	107.8	2155	HC127A30	12x7	14"	300	38	30.50"
45.6	65.2	97.8	130.4	2608	HC147A30	14x7	14"	300	38	30.50"
67.5	96.4	144.6	192.8	3856	HC168A30	16x8	14"	300	38	30.50"
77.4	110.6	165.9	221.2	4423	HC188A30	18x8	14"	300	38	30.50"

Continuous Discharge

Capacity* Tons Per Hour Material Density 35#	50#	75#	100#	ft.³/hr.	Model	Bucket*** Size	Spacing	Chain Speed FPM	Head Sprocket RPM	Pitch Dia.
08.9	12.7	19.1	25.4	508	C85E18	8x5	8"	100	21	18"
11.1	15.9	23.8	31.8	635	C85E24	8x5	8"	125	20	24"
14.0	20.0	30.0	40.0	800	C105E24	10x5	8"	125	20	24"
18.2	26.0	39.0	52.0	1040	C107E24	10x7	12"	125	20	24"
22.3	31.9	47.9	63.8	1276	C127E24	12x7	12"	125	20	24"
26.2	37.4	56.1	74.8	1496	C147E24	14x7	12"	125	20	24"
34.0	48.6	72.9	97.3	1945	C148E24	14x8	12"	125	20	24"
38.9	55.6	83.4	111.2	2223	C168E24	16x8	12"	125	20	24"
44.4	63.5	95.2	126.9	2538	C188E24	18x8	12"	125	20	24"

NOTE:
ft.³/hr. — Cubic feet per hour
— lbs per cubic foot

Dimensions are approximate to the nearest whole inch and are subject to change without notice.

THE MOST VERSATILE BUCKET ELEVATOR

Used for a wide range of products and many applications. Fully spaced buckets easily accommodate larger particle sizes. Setting the standard for the industry, dependable Sweet® Centrifugal Discharge and Continuous Discharge Elevators on belt and chain include:

Head Terminal

- Lined discharge areas and split head top covers on larger capacities.
- Lagged head pulleys or head sprocket with tapered bushings or cast iron drilled rim with finished bore.
- Quick opening inspection panels on both sides of head.
- Double row spherical lubricated head shaft bearings.
- Head shaft seals.
- Built-in motor supports.

Intermediate Trunking Sections

- Dust tight formed double angle corners, punched in fixture with caulked seams. Standard 10' lengths.
- Precision punched heavy duty galvanized angle flanges with fixtured continuous weld assures squareness and simple field erection.

Inspection Section

- Four foot bolted service door with inspection panel, in 5' trunking section.
- Removable access panel on each side.

Boot Terminal

- Sealed external flange block lubricated ball bearings on boot shaft.
- Self-cleaning wing boot pulley or boot sprocket with tapered bushings.
- Bottom lined tapered inlet hopper.
- Easy access dual boot clean-out.

Finish

- Galvanized steel construction is standard and stainless steel construction is also available.

Options

- Shaft mounted drives with or without motor.
- Explosion vents in head terminal or intermediate trunking sections.
- Plugged chute switch at head discharge.
- Zero speed switch for boot shaft.
- Galvanized service platforms.
- Aluminum ladder with galvanized safety cage.

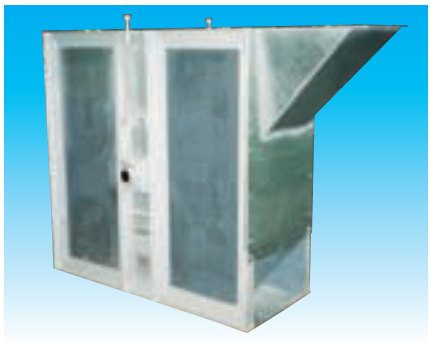

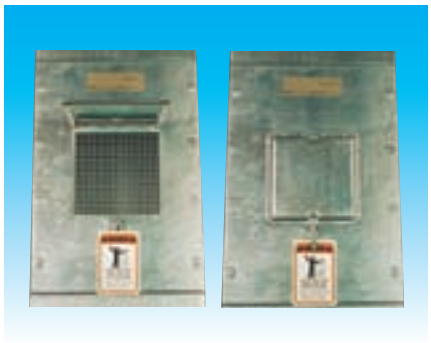

MOVING INTO THE NEXT GENERATION

Industrial Bucket Elevators

Since 1955
Sweet Manufacturing
has been designing
and manufacturing
bulk material handling
and processing equipment
and support systems.

Over the years,
our product line
has expanded through
innovation and development.
By the same token,
our markets have
changed to include
clients all over the world.

With years of
experience in the industry,
Sweet's employees continue
their ongoing commitment to
quality products and service.

"The Quality Line"
ALWAYS THE BEST VALUE

SWEET® MANUFACTURING COMPANY

Telephone 937-325-1511
Fax 937-322-1963
Toll Free 1-800-334-7254

Website: www.sweetmfg.com
E-mail: sales@sweetmfg.com

Springfield, OH 45501

The Governor's Excellence in Exporting Award

MEMBER OF AFIA

MP-5M-5/03